# DC3线 | 电感式

# M8

CE

| | | | | |
|---|---|---|---|---|
| 安装方式[f/nf] | | 齐平 | 齐平 | 齐平 |
| 感应距离Sn[mm] | | 1.2mm | 2.0mm | 3.0mm |
| 型号 | NPN N.O | LS-01C08N-CS | LS-02C08N-CS | LS-03C08N-CS |
| | NPN N.C | LS-01C08N2-CS | LS-02C08N2-CS | LS-03C08N2-CS |
| | PNP N.O | LS-01C08P-CS | LS-02C08P-CS | LS-03C08P-CS |
| | PNP N.C | LS-01C08P2-CS | LS-02C08P2-CS | LS-03C08P2-CS |
| | | | | |
| 待检测物体标准 | | 铁 8×8×1mm | 铁 8×8×1mm | 铁 9×9×1mm |
| 修正系数 | | Fe37=1/不锈钢约0.85/黄铜约0.5/铝约0.45/铜约0.4 | | |
| 设定距离[mm] | | 0-1.0mm | 0-1.6mm | 0-2.4mm |
| 工作电压[V] | | 10-36VDC | | |
| 最大负载电流[mA] | | 200mA | | |
| 空载电流[mA] | | ≤10mA | | |
| 电压降[V] | | <1.5VDC | <2.0VDC | <2.0VDC |
| 开关频率[Hz] | | 2000Hz | 2000Hz | 1000Hz |
| 响应时间[mS] | | 0.1ms/0.1ms | 0.1ms/0.1ms | 0.2ms/0.2ms |
| 磁滞[Sr的百分比] | | <15% | | |
| 重复精度[Sr的百分比] | | <1% | | |
| 环境温度[℃] | | -25 - +70℃ | | |
| 温度漂移[Sr的百分比] | | <10% | | |
| 极性保护/短路保护 | | 内置/脉冲 | | |
| 过载保护电流[mm] | | 220mA | | |
| 壳体材质 | | 不锈钢 | | |
| 感应面材质 | | PC | | |
| 开关状态显示 | | LED | | |
| 接线方式 | | M8连接器,三针 | | |
| 防护等级 | | IP67 | | |
| 抗冲击 | | 30gn,11ms | | |
| 抗震动 | | 55Hz,1mm ampl.,3×30min. | | |
| EMC | | IEC 60947-5-2 | | |
| 配件 | | 2个固定螺母 | | |

## 尺寸图和接线图
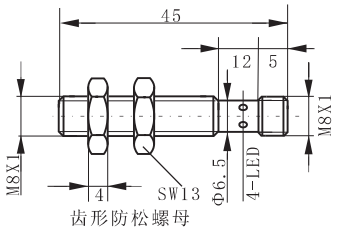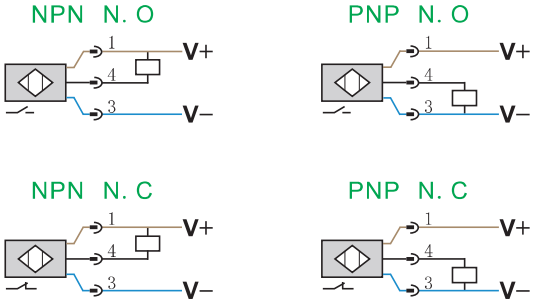
单位：mm